ORDER NO. HAD84122363C8

Service Manual

Amplifier

SU-V1X

Stereo Integrated Amplifier

Color

(K) · · · · Black Type
(S) · · · · Silver Type

Color	Area	
(K)(S)	[E] · · · · ·	Switzerland and Scandinavia
(S)	[EF] · · · ·	France
(K)(S)	[Ei] · · · ·	Italy
(K)(S)	[EK] · · · ·	United Kingdom
(K)(S)	[EH] · · · ·	Holland
(K)(S)	[EGA] · · ·	F.R. Germany
(K)(S)	[EB] · · · ·	Belgium
(K)(S)	[XA] · · ·	Asia, Latin America, Africa, Middle Near East and Oceania
(S)	[XL] · · ·	Australia

SPECIFICATIONS

(DIN 45 500)

■ AMPLIFIER SECTION

1 kHz continuous power output	
both channels driven	2×45 W (4Ω)
	2×45 W (8Ω)
20 Hz~20 kHz continuous power output	
both channels driven	2×40 W (4Ω)
	2×40 W (8Ω)
Total harmonic distortion	
rated power at 20 Hz~20 kHz	0.03% (4Ω)
	0.009% (8Ω)
rated power at 1 kHz	0.007% (4Ω)
	0.003% (8Ω)
half power at 20 Hz~20 kHz	0.007% (8Ω)
half power at 1 kHz	0.002% (8Ω)
Intermodulation distortion	
rated power at 250 Hz: 8 kHz=4:1, 8Ω	0.03%
rated power at 60 Hz: 7 kHz=4:1, SMPTE, 8Ω	0.009%
Power bandwidth	
both channels driven, −3 dB	5 Hz~40 kHz (4Ω, 0.09%)
	5 Hz~50 kHz (8Ω, 0.05%)
Residual hum and noise	0.9 mV
Damping factor	30 (4Ω), 50 (8Ω)
Input sensitivity and impedance	
PHONO	2.5 mV/47 kΩ
TUNER, CD, VIDEO/AUX, TAPE 1/DA TAPE, TAPE 2/EXT	150 mV/22 kΩ
PHONO maximum input voltage (1 kHz, RMS)	160 mV
S/N	
rated power (4Ω)	
PHONO	76 dB (IHF, A: 81 dB, input 2.5 mV)
TUNER, CD, VIDEO/AUX, TAPE 1/DA TAPE, TAPE 2/EXT	90 dB (IHF, A: 100 dB)
Frequency response	
PHONO	RIAA standard curve
	±0.8 dB (30 Hz~15 kHz)
TUNER, CD, VIDEO/AUX, TAPE 1/DA TAPE, TAPE 2/EXT	5 Hz~120 kHz (−3 dB)
	+0, −0.2 dB (20 Hz~20 kHz)
Tone controls	
BASS	50 Hz, +10 dB~−10 dB
TREBLE	20 kHz, +10 dB~−10 dB
Muting	−20 dB
Loudness control (volume at −30 dB)	50 Hz, +9 dB
Output voltage and impedance	
REC OUT	150 mV
Channel balance, VIDEO/AUX 250 Hz~6,300 Hz	±1 dB
Channel separation, VIDEO/AUX 1 kHz	60 dB
Headphones output level and impedance	450 mV/330Ω
Load impedance	
MAIN or REMOTE	4Ω~16Ω
MAIN and REMOTE	8Ω~16Ω

■ GENERAL

Power consumption	310 W
Power supply	
For United Kingdom and Australia	AC 50 Hz/60 Hz, 240 V
For continental Europe	AC 50 Hz/60 Hz, 220 V
For others	AC 50 Hz/60 Hz, 110 V/127 V/220 V/240 V
Dimensions (W×H×D)	430×97×290 mm (16-15/16"×3-27/32"×11-7/16")
Weight	5.6 kg (12.3 lb.)

Note:
Total harmonic distortion is measured by the digital spectrum analyzer (H.P. 3045 system).

Specifications are subject to change without notice. Weight and dimensions shown are approximate.

Technics

Matsushita Electric Trading Co., Ltd.
P.O. Box 288, Central Osaka Japan

www.hifiengine.com

CONTENTS

	Page
PROTECTION CIRCUITRY	2
BEFORE REPAIR AND ADJUSTMENT	2
LOCATION OF CONTROLS	2, 3
DISASSEMBLY INSTRUCTIONS	4, 5
BLOCK DIAGRAM	6
PRINTED CIRCUIT BOARDS	7, 8
SCHEMATIC DIAGRAM	9 ~ 12
TERMINAL GUIDE OF TRANSISTORS, DIODES AND IC'S	12
REPLACEMENT PARTS LIST	13, 14
EXPLODED VIEW	15, 16

PROTECTION CIRCUITRY

The protection circuitry may have operated if either of the following conditions is noticed:

- No sound is heard when the power is turned on.
- Sound stops during a performance.

The function of this circuitry is to prevent circuitry damage if, for example, the positive and negative speaker connection wires are "shorted", or if speaker systems with an impedance less than the indicated rated impedance of this unit is used.

If this occurs, follow the procedure outlines below:

1. Turn off the power.
2. Determine the cause of the problem and correct it.
3. Turn on the power once again.

Note

When the protection circuitry functions, the unit will not operate unless the power is first turned off and then on again.

BEFORE REPAIR AND ADJUSTMENT

1. Disconnect AC power, Discharge both Power Supply Capacitors C501 and C502 (6800μF) through a 10Ω, 5W resistor to ground.
   DO NOT SHORT-CIRCUIT DIRECTLY (with a screwdriver blade, for instance), as this may distroy solid state devices.
2. After repairs are completed, restore power gradually using a variac, to avoid overcurrent.
   Current consumption at 50Hz in NO SIGNAL mode should be shown below with respect to supply voltage 110V/127V/220V/240V.

Power supply voltage		AC110V	AC127V	AC220V	AC240V
Consumed current	50Hz	130 ~ 370mA	115 ~ 325mA	50 ~ 180mA	40 ~ 170mA

LOCATION OF CONTROLS

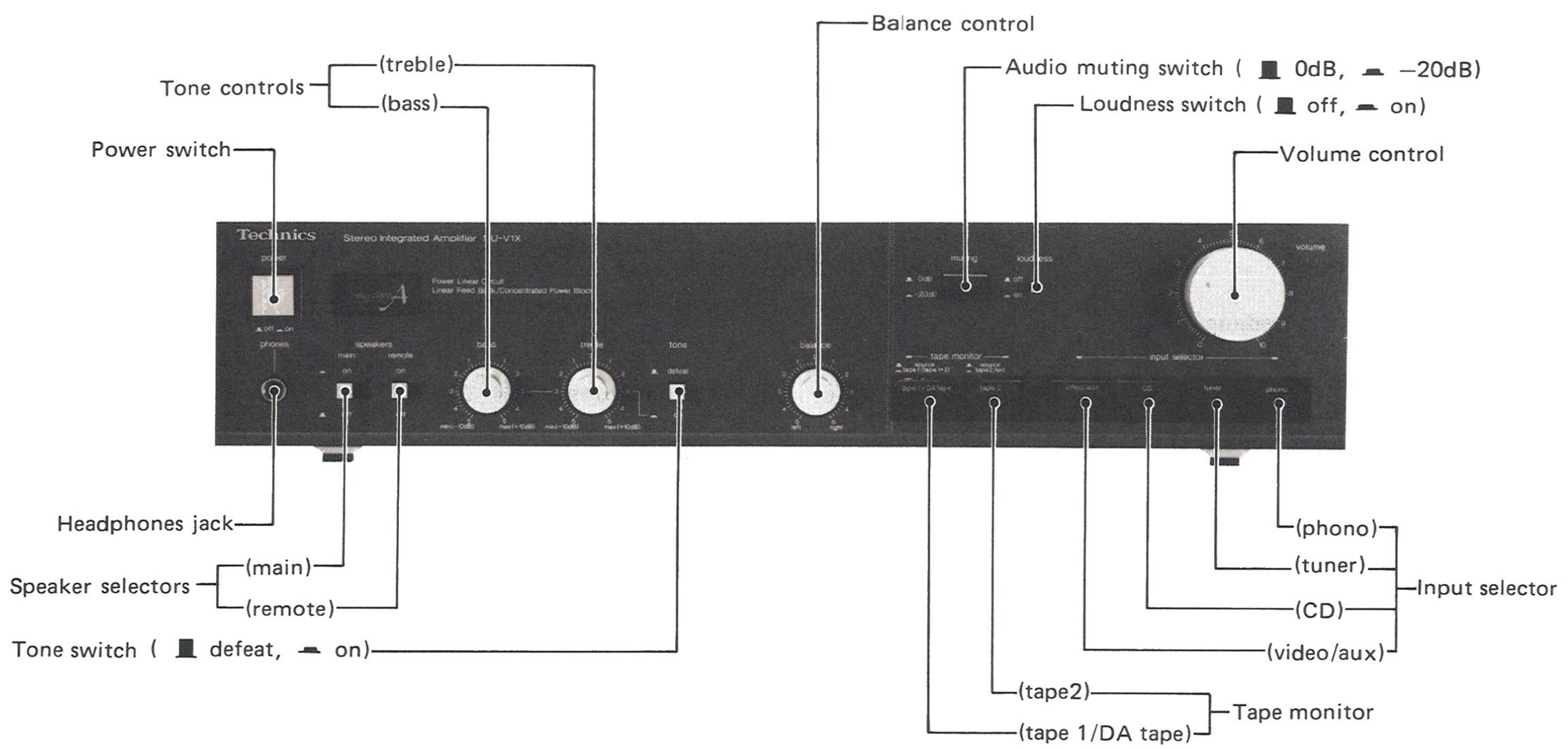

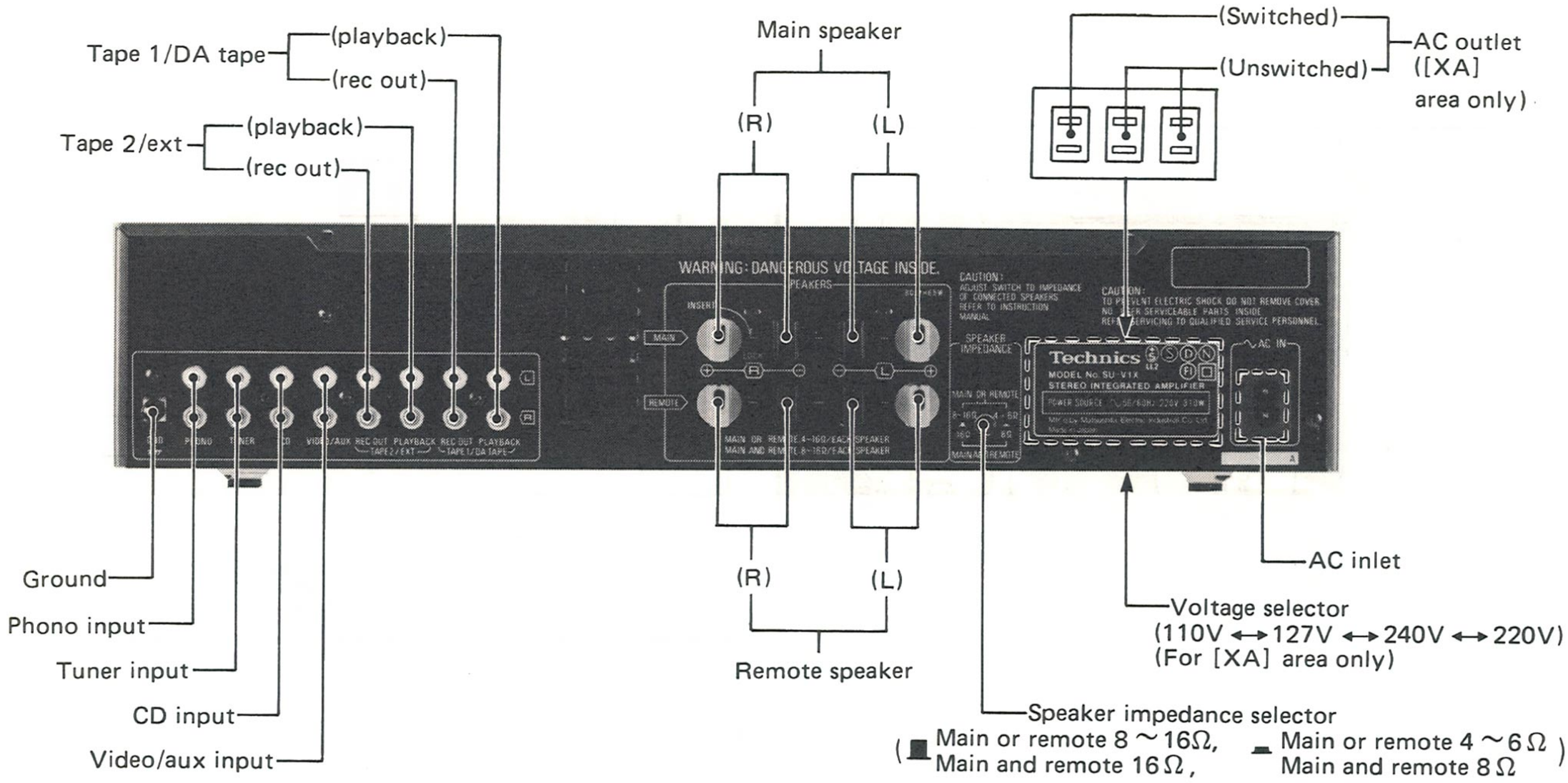

• Speaker impedance selector

Set to the position corresponding to the impedance of the speaker systems being used.
If this setting is not correctly made, the result may be a deterioration of performance.

*** If either the main or the remote speaker systems are used:**

4~6Ω (▟→▂):
For speaker impedance of 4~6Ω.

8~16Ω (▂→▟):
For speaker impedance of 8~16Ω.

*** If both main and remote speaker systems are used:**

8Ω (▟→▂):
For speaker impedance of 8Ω or more and less than 16Ω.

16Ω (▂→▟):
For speaker impedance of 16Ω.

Note that, if 2 pairs of speaker systems are used at the same time, determine the composite impedance as described below.

$$R = \frac{R_1 \times R_2}{R_1 + R_2}$$

Where:
R = total impedance
R_1 = impedance of speaker systems connected to "MAIN" terminals
R_2 = impedance of speaker systems connected to "REMOTE" terminals

Note:
Be sure to make this setting before switching the power "on".

- The power supply for this unit varies depending upon the areas. Also, the parts used for power supply are different.
  So, refer to the circuit diagram (Separate service manual: Order No. HAD84122363C8–A) and the replacement parts list.

* [XA] area is provided with voltage selector.
* 220V (50/60Hz) for Continental Europe. (Except for United Kingdom)
* 240V (50/60Hz) for [EK] and [XL] areas.
* 110V/127V/220V/240V (50/60Hz) for [XA] area.
* Phono input capacitance is about 150pF.

www.hifiengine.com

■ DISASSEMBLY INSTRUCTIONS

Ref. No. 1	How to remove the cabinet
Procedure 1	1. Remove the screws (❶ ~ ❹).

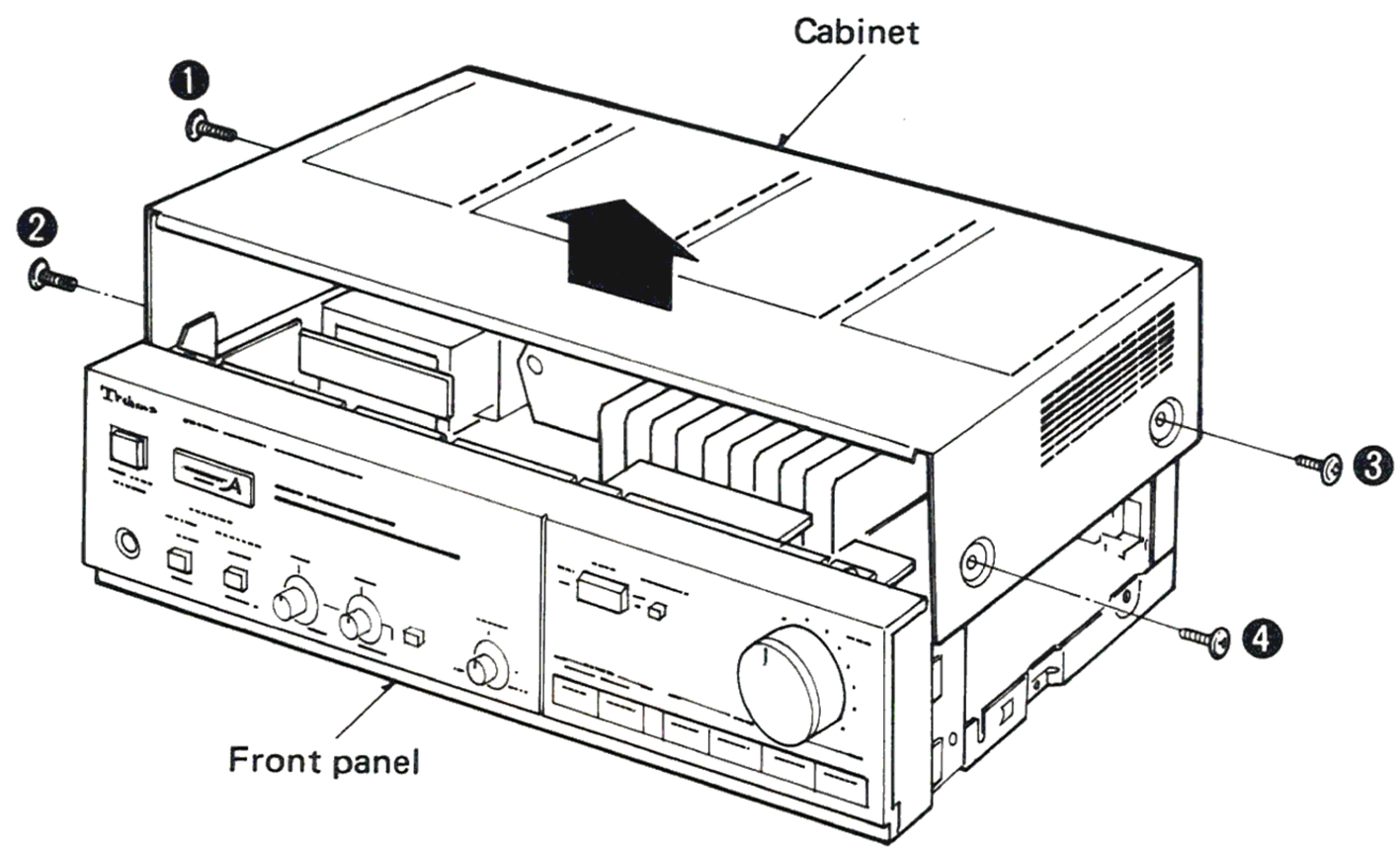

Ref. No. 2	How to remove the bottom board
Procedure 1 → 2	1. Remove the 1 screw. (❶)

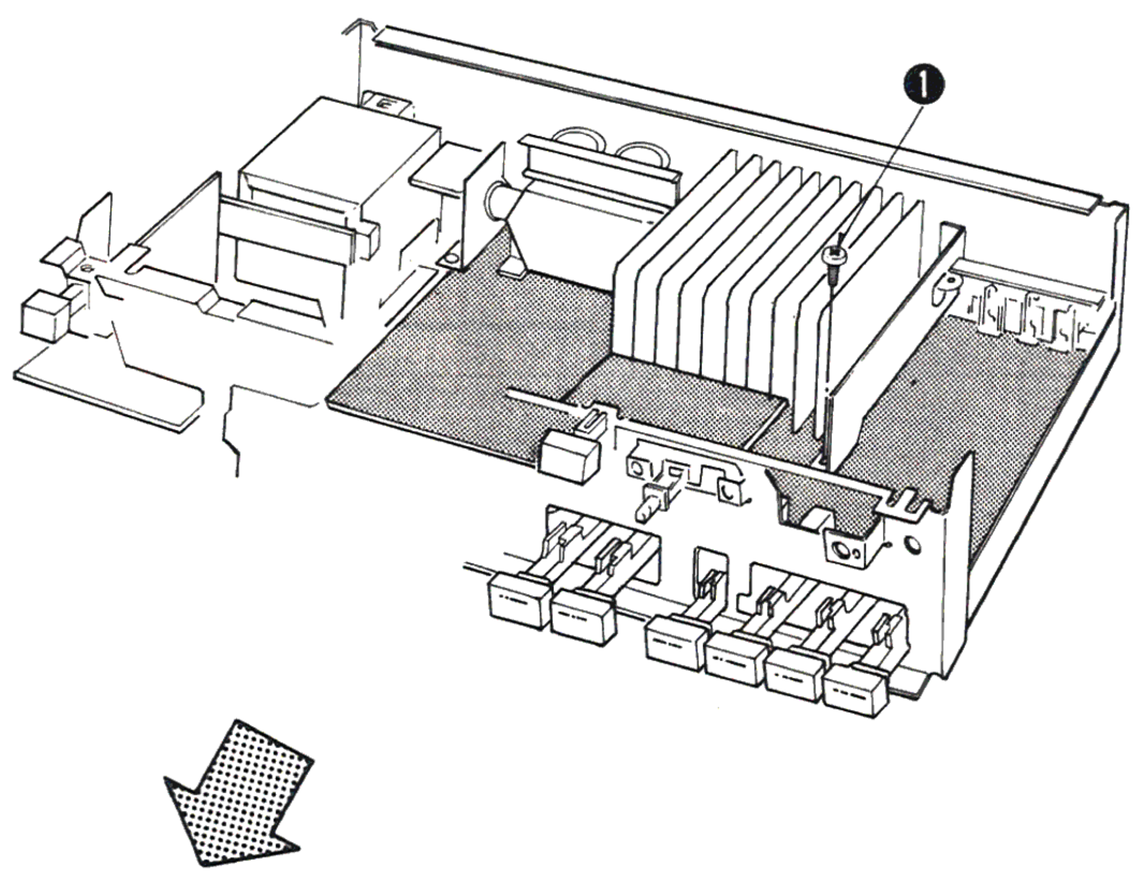

2. Remove the 4 screws (❷ ~ ❺).

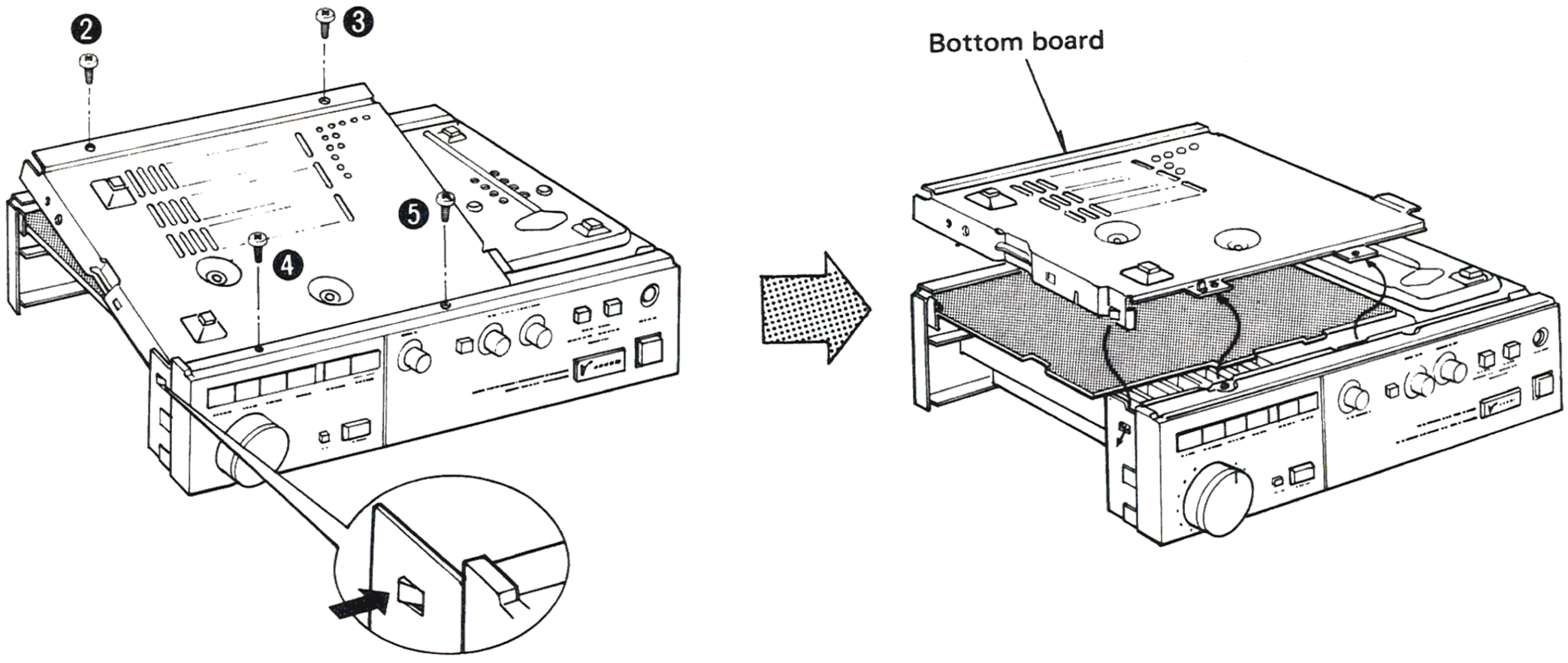

www.hifiengine.com

Ref. No. 3	How to remove the front panel
Procedure 1 →3	1. Remove the 5 screws.(❶ ~ ❺) 2. Remove the volume control knob. 3. Remove the 1 nut. (❻) 4. Pull out the 3 connectors. (J1, J3, J7)

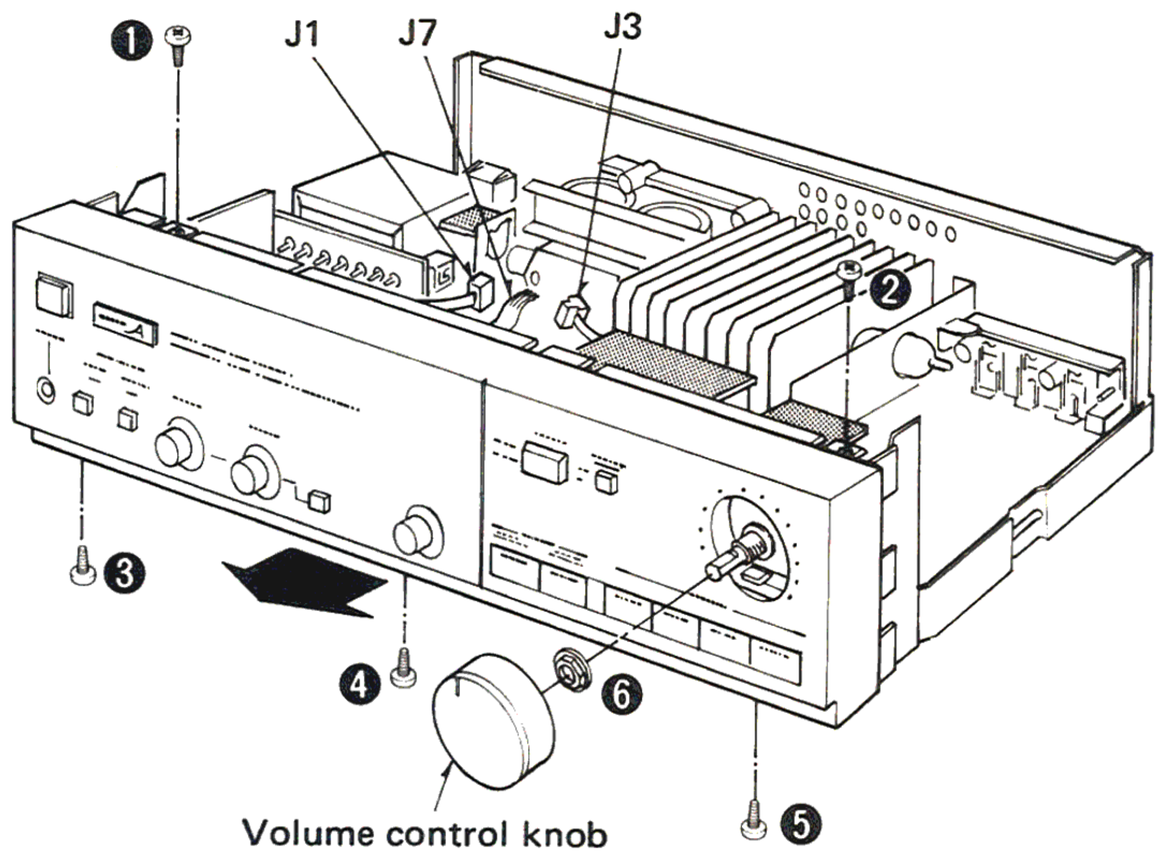

Ref. No. 4	How to remove the Tone control P.C.B.
Procedure 1 →3 →4	1. Remove the 2 screws. (❶ , ❷) 2. Remove the 4 knobs. 3. Remove the 2 screws (❸ , ❹) 4. Remove the 3 nuts. (❺ ~ ❼)

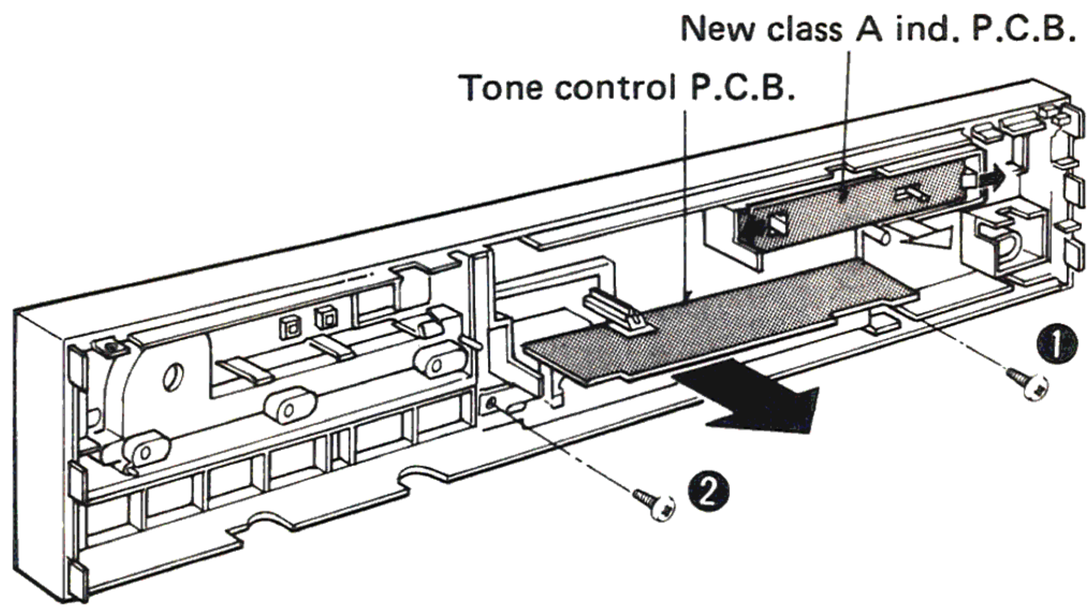

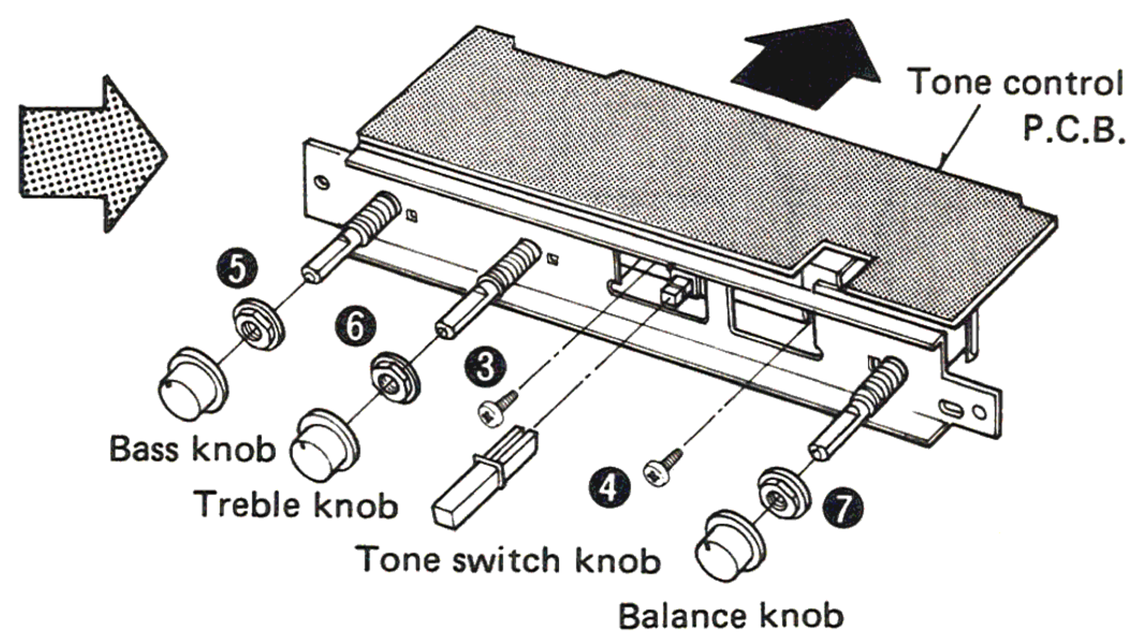

Ref. No. 5	How to remove the power IC
Procedure 1 →2 →5	1. Unsolder the power IC. 2. Remove the 2 screws (❶ , ❷)

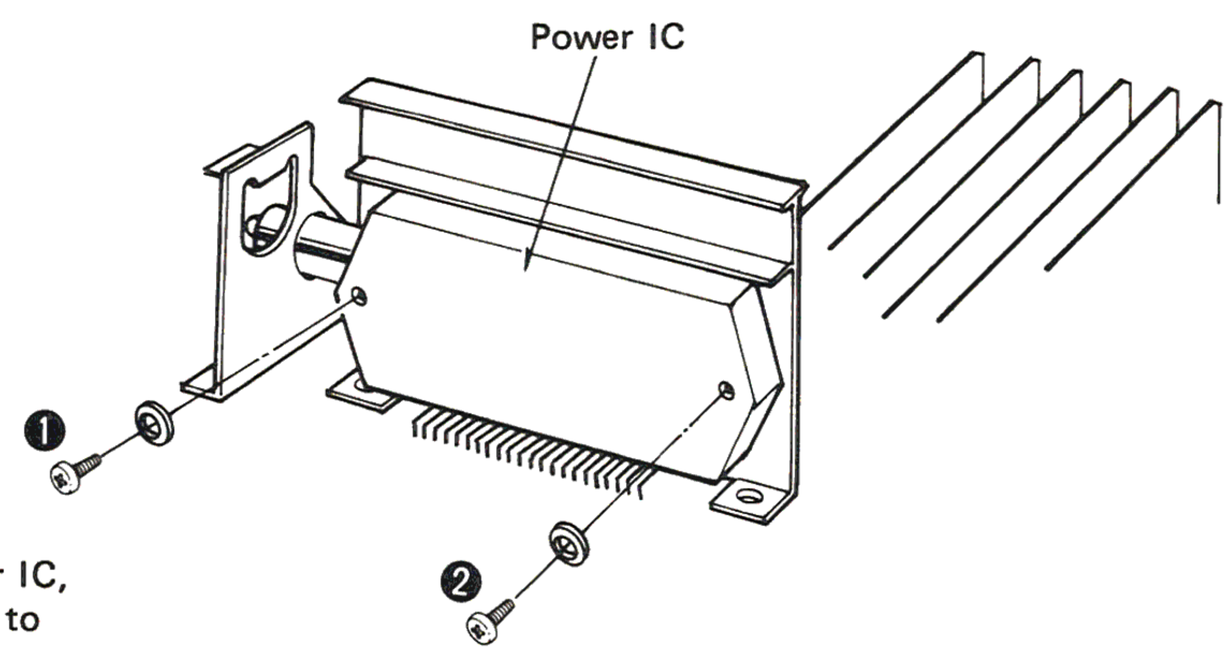

When mounting the power amplifier IC, apply silicon compound (SZZ0L15) to the rear of the power amplifier IC.

www.hifiengine.com

BLOCK DIAGRAM

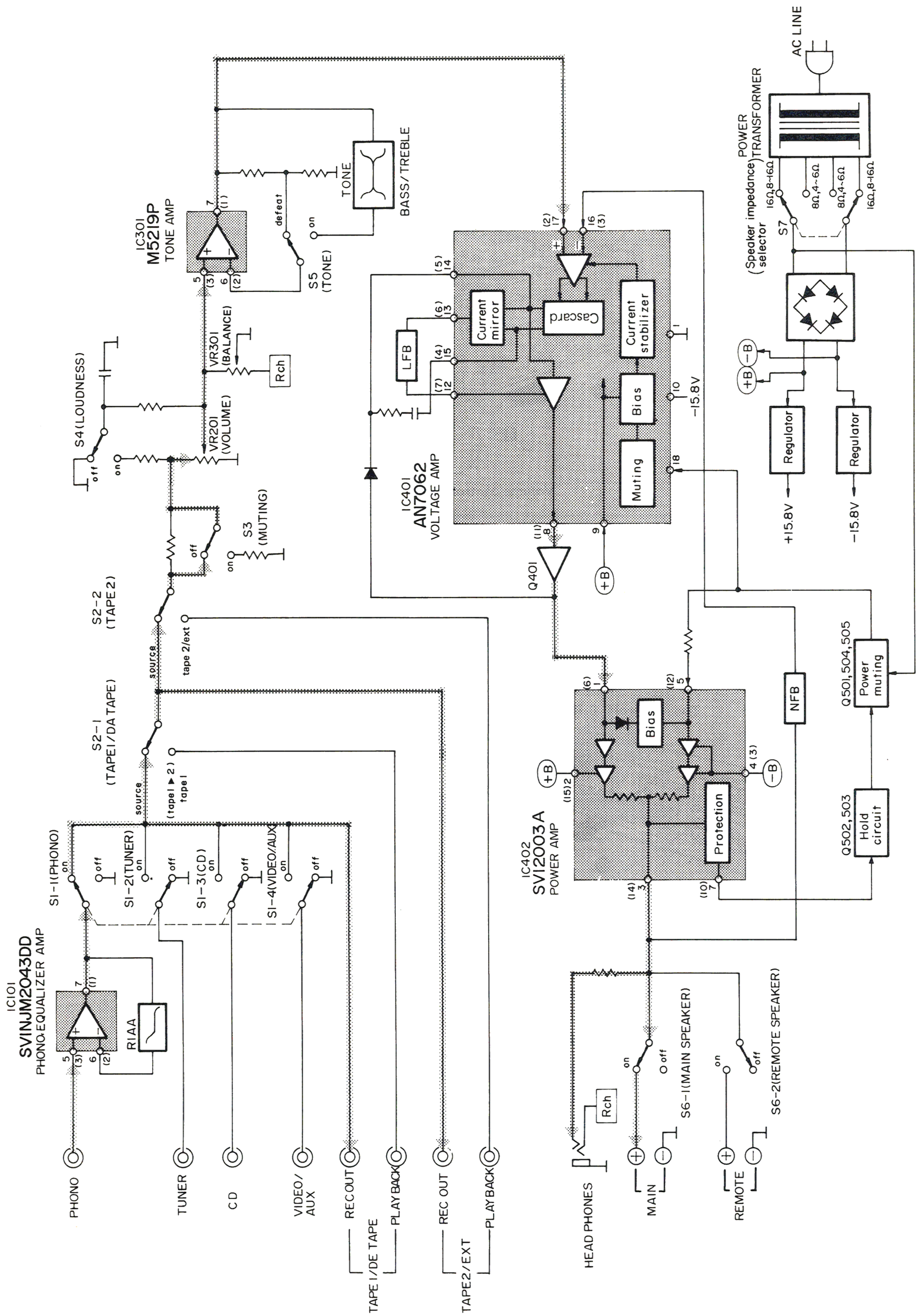

■ PRINTED CIRCUIT BOARDS

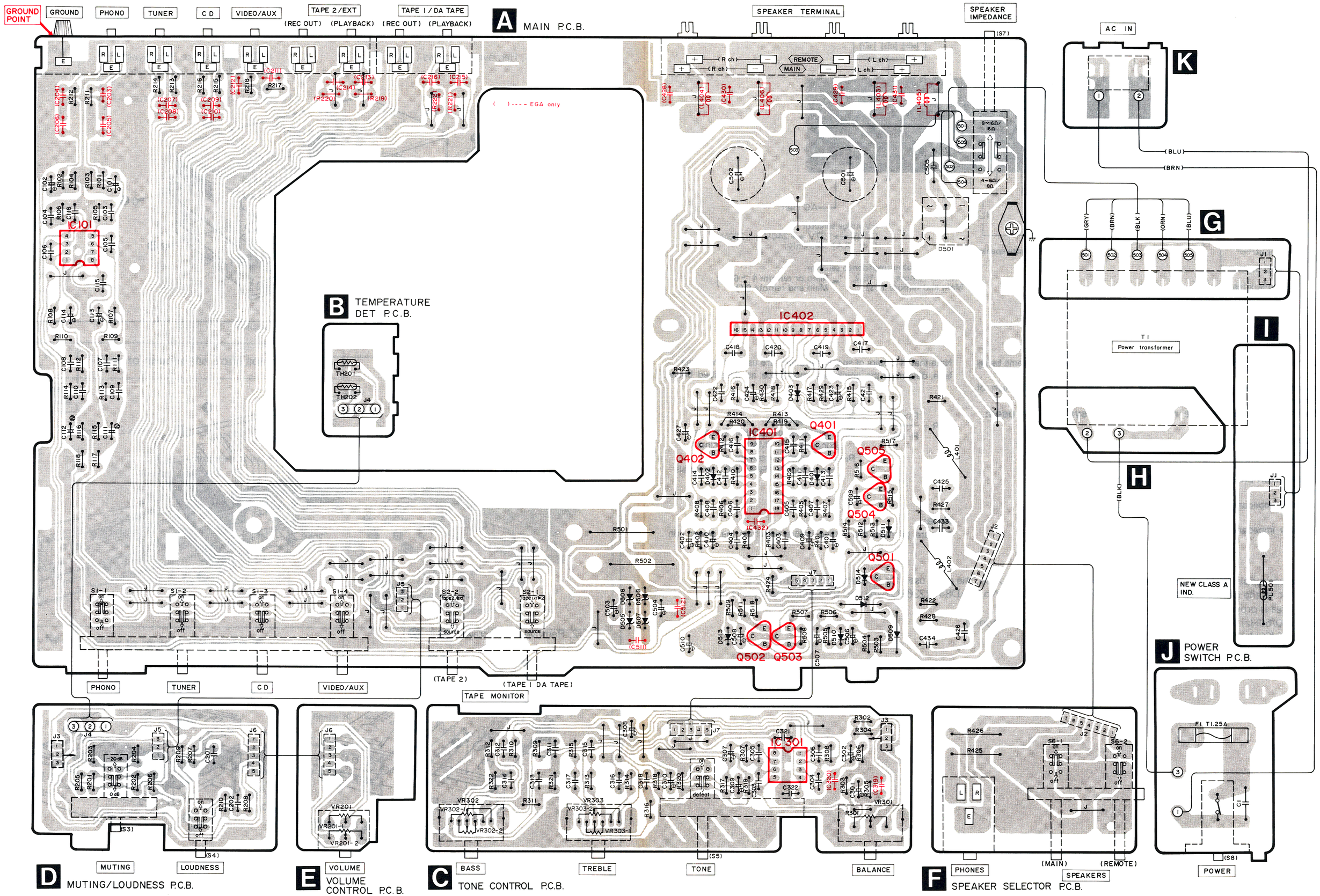

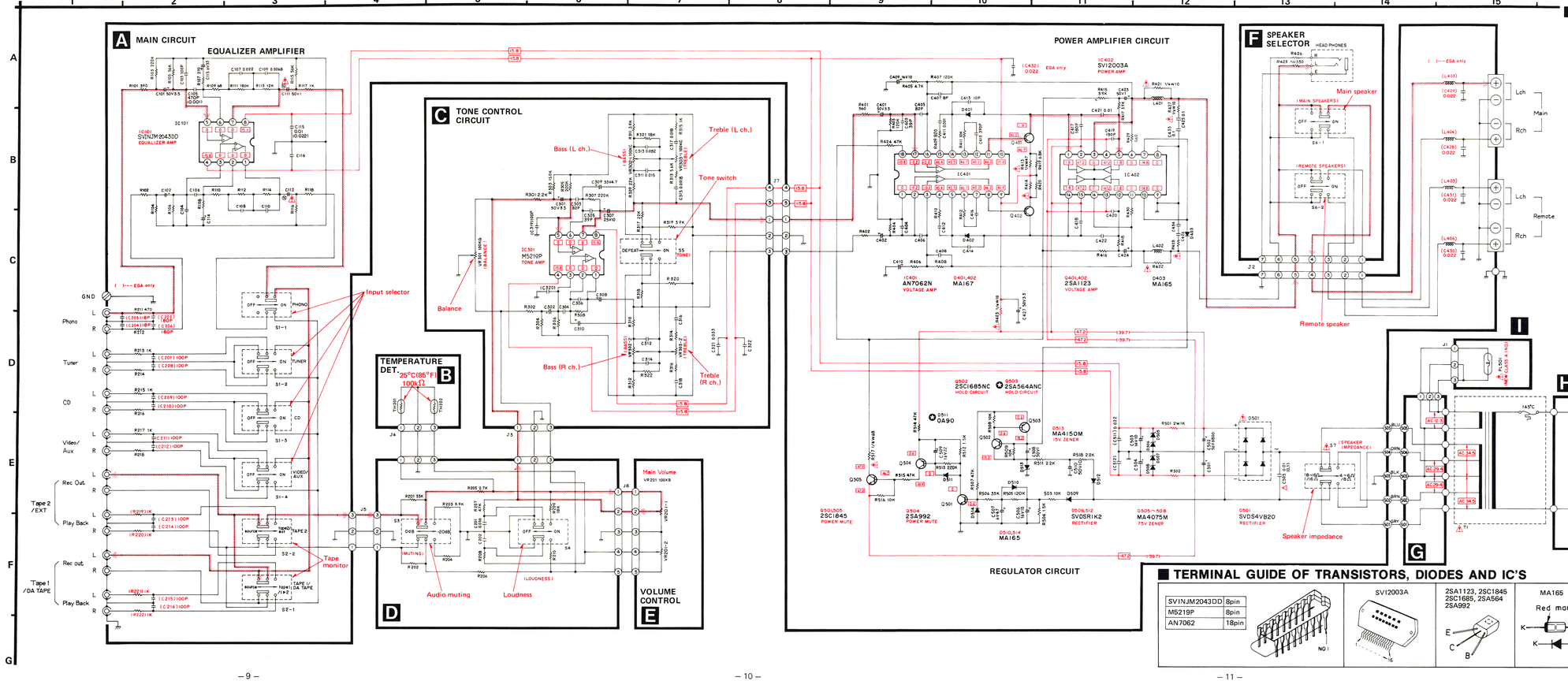

SCHEMATIC DIAGRAM

(This schematic diagram may be modified at any time with the development of new technology.)

* **The part No. of transistors, IC and diodes mentioned in the schematic diagram stand for production part No. Regarding the part No. with ⊙ mark, the production part No. are different from the replacement part No. Therefore, when placing an order for replacement part, please use the part No. in the replacement part list.**

Notes:

1. **S1-1 ~ S1-4** : Input selector switch in **"phono"** position, phono/tuner/CD/video, aux
2. **S2-1** : Tape monitor (tape1/DA tape) switch in **"source"** position, source ⟷ tape1 (tape 1 ▶ 2)
3. **S2-2** : Tape monitor (tape 2) switch in **"source"** position, source ⟷ tape 2/ext
4. **S3** : Muting switch in **"0dB"** position, 0dB ⟷ −20dB
5. **S4** : Loudness switch in **"off"** position, off ⟷ on
6. **S5** : Tone switch in **"defeat"** position, defeat ⟷ on
7. **S6-1** : Main speaker switch in **"on"** position.
8. **S6-2** : Remote speaker switch in **"off"** position.
9. **S7** : Speaker impedance selector switch in **"8 ~ 16Ω/16Ω"** position. Main or remote 8 ~ 16Ω ⟷ Main or remote 4 ~ 6Ω; Main and remote 16Ω ⟷ Main and remote 8Ω
10. **S8** : Power switch in **"on"** position.
11. **S9 [XA] only** : Voltage selector switch in **"240V"** position. 110V ⟷ 127V ⟷ 240V ⟷ 220V
12. Important safety notice: Components identified by ⚠ mark have special characteristics important for safety. When replacing any of these components, use only manufacturer's specified parts.
13. ▭ Indicated voltage values are the standard values for the DC electronic circuit tester (high-impedance) with the chassis taken as standard. Therefore, there may exist some errors in the voltage values, depending on the internal impedance of the DC circuit tester. [high tap ⟷ 8 ~ 16Ω/16Ω]
14. Figures in ( ) stand for DC voltage in low tap. [4 ~ 6Ω/8Ω]
15. ═══ Phono signal (Lch).
16. ═══ Positive voltage lines and Negative voltage lines.
17. This is the basic circuit diagram (For continental Europe) of this unit. Note that part of the circuit is subject to change depending on the areas.
18. Regarding the circuits to be changed in the basic circuit diagram (For continental Europe) and related area [XA]refer to the separate service manual (Order No. HAD84122363C8-A).

TERMINAL GUIDE OF TRANSISTORS, DIODES AND IC'S

SVINJM2043DD	8pin
M5219P	8pin
AN7062	18pin

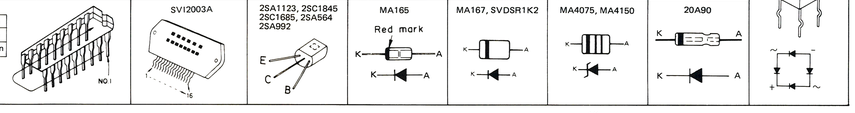

■ REPLACEMENT PARTS LIST

Notes:
1. Part numbers are indicated on most mechanical parts. Please use this part number for parts orders.
2. Important safety notice: Components identified by ⚠ mark have special characteristics important for safety. When replacing any of these components use only manufacturer's specified parts.
3. Ⓚ —marked parts are used for black only, while ○ —marked parts are for silver type only.
4. Part other than Ⓚ — and ○ —marked are used for both black and silver type.
5. The parenthesized numbers in the column of description stand for the quantity per set.
6. The "Ⓢ" mark is service standard parts and may differ from production parts.
7. The unit of resistance is Ω(ohm), K = 1000Ω, M = 1000kΩ.
8. The unit of capacitance is μF (microfarad). P = 10^{-6} μF
9. Bracketed indications in Ref. No. columns specify the area. Parts without these indications can be used for all areas.

Resistor Type	Wattage	Tolerance
ERD : Carbon	25 : 1/4W	J : ±5%
ERG : Metal Oxide	S1 : 1/2W	G : ±2%
	S2 : 1/4W	

Capacitor Type	Voltage: ECEA Type	Voltage: Other	Tolerance
ECEA : Electrolytic	0J : 6.3V	1H : 50V	K : ±10%
ECCD : Ceramic	1C : 16V	KC : 400V AC	Z : +80%, −20%
ECKD : Ceramic	1E : 25V	2H : 500V	P : +100%, −0%
ECQM : Polyester	1H : 50V	10 : 1000V	J : ±5%
ECET : Electrolytic	1V : 35V		C : ±0.25pF
ECEA. . . N : Non Polar Electrolytic	56V : 56V		
ECQE : Polyester			

● RESISTORS

Ref. No.	Part No.	Value
R101,102	ERDS2TJ391	390
R103,104	ERDS2TJ224	220K
R105,106	ERDS2TJ563	56K
R107,108	ERDS2TJ271	270
R109,110	ERDS2TJ680	68
R111,112	ERDS2TJ184	180K
R113,114	ERDS2TJ123	12K
R115,116	ERDS2TJ563	56K
R117,118	ERDS2TJ102	1K
R201,202	ERDS2TJ333	33K
R203,204	ERDS2TJ392	3.9K
R205,206	ERDS2TJ272	2.7K
R207,208	ERDS2TJ473	47K
R209,210	ERDS2TJ183	18K
R211,212	ERDS2TJ471	470
R213,214	ERDS2TJ102	1K
R215,216	ERDS2TJ102	1K
R217,218	ERDS2TJ102	1K
R219,220 〔EGA〕only	ERDS2TJ102	1K
R221,222 〔EGA〕only	ERDS2TJ102	1K
R301,302	ERDS2TJ222	2.2K
R303,304	ERDS2TJ154	150K
R305,306	ERDS2TJ224	220K
R307,308	ERDS2TJ224	220K
R309,310	ERDS2TJ223	22K
R311,312	ERDS2TJ392	3.9K
R313,314	ERDS2TJ562	5.6K
R315,316	ERDS2TJ102	1K
R317,318	ERDS2TJ223	22K
R319,320	ERDS2TJ392	3.9K
R321,322	ERDS2TJ183	18K
R401,402	ERDS2TJ561	560
R403,404	ERDS2TJ124	120K
R405,406	ERDS2TJ472	4.7K
R407,408	ERDS2TJ124	120K

Ref. No.	Part No.	Value
R409,410	ERDS2TJ821	820
R411,412	ERDS2TJ103	10K
R413,414 ⚠	ERD2FCG470	47
R415,416	ERDS2TJ392	3.9K
R417,418	ERDS2TJ392	3.9K
R419,420	ERDS2TJ682	6.8K
R421,422 ⚠Ⓢ	ERD25FJ100	10
R423 ⚠Ⓢ	ERD25FJ100	10
R424	ERDS2TJ473	47K
R425,426	ERG1ANJ331	330
R427,428 ⚠	ERDS1FJ100	10
R429,430	ERDS2TJ561	560
R501,502	ERG2ANJ102	1K
R503	ERDS2TJ103	10K
R504	ERDS2TJ152	1.5K
R505	ERDS2TJ124	120K
R506	ERDS2TJ333	33K
R507	ERDS2TJ473	47K
R508,509	ERDS2TJ103	10K
R511	ERDS2TJ222	2.2K
R512	ERDS2TJ152	1.5K
R513	ERDS2TJ224	220K
R514,515	ERDS2TJ473	47K
R516	ERDS2TJ103	10K
R517 Ⓢ⚠	ERD25FJ680	68
R518	ERDS2TJ222	2.2K

● CAPACITORS

Ref. No.	Part No.	Value
C1 ⚠	ECKDKC103PF	0.01
C101,102	ECEA1HU3R3	3.3
C103,104 Ⓢ	ECCD1H101K	100P
C105,106 〔EGA〕only Ⓢ	ECKD1H102KB	0.001
C105,106 Ⓢ except〔EGA〕	ECKD1H471KB	470P

Ref. No.	Part No.	Value
C107,108 Ⓢ	ECQM1H223JZ	0.022
C109,110 Ⓢ	ECQM1H682JZ	0.0068
C111,112 ⚠	ECEA1HN010S	1
C113,114	ECEA0JU330	33
C115,116 〔EGA〕only Ⓢ	ECKD1H223ZF	0.022
C115,116 Ⓢ except〔EGA〕	ECKD1H103ZF	0.01
C201,202 Ⓢ	ECQM1H563JZ	0.056
C203,204 〔EGA〕only Ⓢ	ECCD1H180KC	18P
C205,206 〔EGA〕only Ⓢ	ECCD1H181K	180P
C207,208 〔EGA〕only Ⓢ	ECCD1H101K	100P
C209,210 〔EGA〕only Ⓢ	ECCD1H101K	100P
C211,212 〔EGA〕only Ⓢ	ECCD1H101K	100P
C213,214 〔EGA〕only Ⓢ	ECCD1H101K	100P
C215,216 〔EGA〕only Ⓢ	ECCD1H101K	100P
C301,302	ECEA1HU3R3	3.3
C303,304 Ⓢ	ECCD1H820K	82P
C305,306 Ⓢ	ECCD1H390K	39P
C307,308	ECEA1EU100	10
C309,310	ECEA1VU4R7	4.7
C311,312 Ⓢ	ECQM1H153JZ	0.015
C313,314 Ⓢ	ECQM1H823JZ	0.082
C315,316 Ⓢ	ECQM1H182JZ	0.0018
C317,318 Ⓢ	ECQM1H183JZ	0.018
C319,320 〔EGA〕only Ⓢ	ECCD1H101K	100P
C321,322 Ⓢ	ECKD1H333ZF	0.033
C401,402	ECEA1HU3R3	3.3

Ref. No.	Part No.	Value
C403,404 Ⓢ	ECCD1H390K	39P
C405,406 Ⓢ	ECCD1H820K	82P
C407,408 Ⓢ	ECCD1H080CC	8P
C409,410	ECEA1CU100	10
C411,412 Ⓢ	ECKD1H102KB	0.001
C413,414 Ⓢ	ECCD1H100KC	10P
C415,416 Ⓢ	ECKD1H391KB	390P
C417,418 Ⓢ	ECCD1H181K	180P
C419,420 Ⓢ	ECCD1H181K	180P
C421,422 Ⓢ	ECQM1H103JZ	0.01
C423,424	ECEA1HU010	1
C425,426 Ⓢ	ECQM1H104JZ	0.1
C427	ECEA1HU3R3	3.3
C428,429 〔EGA〕only Ⓢ	ECKD1H223ZF	0.022
C430,431 〔EGA〕only Ⓢ	ECKD1H223ZF	0.022
C432 〔EGA〕only Ⓢ	ECKD1H223ZF	0.022
C433,434 Ⓢ	ECQM1H104JZ	0.1
C501,502	ECETS56V682U	6800
C503,504	ECEA1CU100	10
C505 ⚠ 〔EGA〕only	ECQE10104MV	0.1
C505 ⚠ except〔EGA〕	ECKD2H103PE	0.01
C506	ECEA1CU100	10
C507	ECEA0JU470	47
C508	ECEA1HU010	1
C509	ECEA1CU220	22
C510	ECEA1HU100	10
C511,512 〔EGA〕only Ⓢ	ECKD1H223ZF	0.022

www.hifiengine.com

Ref. No.	Part No.	Part Name & Description
INTEGRATED CIRCUITS		
IC101	SVINJM2043DD	Equalizer
IC301	M5219P	Tone Amp.
IC401	AN7062N	Voltage Amp.
IC402	SVI2003A	Power Amp.
TRANSISTORS		
Q401,402	2SA1123−R	Voltage Amp.
Q501,505	2SC1845−E	Power Muting
Q502	2SC1685−QNC	Hold Circuit
Q503 Ⓢ	2SA722−S	Hold Circuit
Q504	2SA992E	Power Muting
DIODES		
D401,402	MA167	Switching
D403,510,514	MA165	Switching
D501 ⚠	SVDS4VB20	Rectifier
D505~508	MA4075M	Zener, 7.5V
D509,512 Ⓢ ⚠	SVDSR1K2	Rectifier
D511 Ⓢ	20A90	Switching
D513	MA4150M	Zener, 15V
COILS		
L401,402	SLQY18G-10	Choke
L403~406 〔EGA〕only	SLQY07G-30	Choke
TRANSFORMER		
T1〔XA〕 ⚠	SLT5M419−W	Power Source
T1〔EK,XL〕 ⚠	SLT5M421−W	Power Source
T1 Other ⚠	SLT5M418−W	Power Source
VARIABLE RESISTORS		
VR201	EWJKMA054B15	Volume, 100kΩ(B)
VR301	EWHF5AF25G15	Balance, 100kΩ(G)
VR302,303	EWCXEA011C15	Tone, 100kΩ(C)
THERMISTER		
TH201,202	ERTD2ZHK104S	100kΩ
LAMP		
PL501 ⚠	XAMR74S17	AC12V,0.055A
FUSES		
F1〔XA〕only ⚠	XBA2C25TR0	250V, T2.5A
F1 Other ⚠	XBA2C12TR0	250V, T1.25A
F2〔XA〕only ⚠	XBA2C12TR0	250V, T1.25A
SWITCHES		
S1-1~1-4	SSH487	Input Selector
S2-1,2-2	SSH2091	Tape Monitor
S3	SSH1186	Muting
S4	SSH1165	Loudness
S5	SSH1185	Tone
S6-1,6-2	SSH2081	Speaker
S7 ⚠	SSH1152	Impedance
S8 ⚠	SSH1057	Power Source
S9〔XA〕only ⚠	ESE37263	Voltage Selector
CABINET and CHASSIS PARTS		
1	SBN1125	Knob, Volume (1)
2 ○	SGWUV1X−SE	Front Panel, Ass'y (Silver Type) (1)
2 Ⓚ	SGWUV1X−KE	Front Panel, Ass'y (Black Type) (1)
3	SBN1153	Knob, Bass, Treble, Balance (3)
4	SBC719	Button, Speaker, Tone (3)
5	SUW2920	Bracket (1)
6	SBC621	Button, Loudness (1)
7 ○	SBC672	Button, Muting (Silver Type) (1)
7 Ⓚ	SBC672−1	Button, Muting (Black Type) (1)

Ref. No.	Part No.	Part Name & Description
8	SBC666	Button, Power (1)
9〔EK〕only ○	SKCUV1X−SK	Cabinet (Silver Type) (1)
9 Other ○	SKC1670S1	Cabinet (Silver Type) (1)
9〔EK〕only Ⓚ	SKCUV1X−KK	Cabinet (Black Type) (1)
9Other Ⓚ	SKC1670BB1	Cabinet (Black Type) (1)
10	SJT347	Fuse Holder (2)
11	SJJ71B	Jack, Headphones (1)
12〔XA〕only	SMX875	Insulation Cover (1)
13〔XA〕only	SHR401−1	Lock Pin (2)
14〔XA〕only	SMLUV1X−SX	Bracket, Power Transformer (1)
14 Other	SMLUV1X−SE	Bracket, Power Transformer (1)
〔14-1	〔SKL293	Foot (2)
15 ○	SBC662AW	Button (tapel/DA), (Silver Type) (1)
15 Ⓚ	SBC662−1AW	Button (tapel/DA), (Black Type) (1)
16 ○	SBC662AX	Button (tape2), (Silver Type) (1)
16 Ⓚ	SBC662−1AX	Button (tape2), (Black Type) (1)
17 ○	SBC662AV	Button (video/Aux), (Silver Type) (1)
17 Ⓚ	SBC662−1AV	Button (video/Aux), (Black Type) (1)
18 ○	SBC662AU	Button (CD), (Silver Type) (1)
18 Ⓚ	SBC662−1AU	Button(CD), (Black Type) (1)
19 ○	SBC662AS	Button (tuner), (Silver Type) (1)
19 Ⓚ	SBC662−1AS	Button (tuner), (Black Type) (1)
20 ○	SBC662AR	Button (phono), (Silver Type) (1)
20 Ⓚ	SBC662−1AR	Button (phono), (Black Type) (1)
21	SUB199	Connection Rod (6)
22〔XA〕only	SKUUV1X−SX	Bottom Board (1)
22 Other	SKUUV1X−SE	Bottom Board (1)
〔22-1	〔SKL293	Foot (2)
23	SJF3059−12N	Terminal Board (1)
24	SJF3057N	Terminal Board (1)
25	SJF4815−1	Terminal Board, Speaker (1)
26	SBC165	Button (1)
27〔XA〕only ⚠	SJS9328B	Socket, AC Outlet (1)
28〔XL〕only ⚠	SJS9234B	Socket, AC Inlet (1)
28 Other ⚠	SJS9231B	Socket, AC Inlet (1)
29	SHR401−1	Lock Pin (1)
30〔XL〕only	SJS9234A	Socket Cover, AC Inlet (1)
30 Other	SJS9231A	Socket Cover, AC Inlet (1)
31〔XA〕only	SJS9328A	Socket Cover, AC Outlet (1)
32〔XA〕	SGPUV1X−SX	Rear Panel (1)

Ref. No.	Part No.	Part Name & Description
32〔XL〕	SGPUV1X−SL	Rear Panel (1)
32〔EK〕	SGPUV1X−SK	Rear Panel (1)
32〔EGA〕	SGPUV1X−SG	Rear Panel (1)
32 Other	SGPUV1X−SE	Rear Panel (1)
33	SJS50771DS	Socket (J2), 7Pin (2)
34	SJS5327	Socket (J5), 3Pin (1)
34	SJS5519	Socket (J7), 5Pin (1)
35	SJS3321	Post (J1, J3), 3Pin (2)
36	SHR301	Clamper (3)
37〔XA〕only	SJT347	Fuse Holder (2)
SCREWS		
N1	XTB3+8JFZ	Tapping, ⊕3×8 (6)
N2 Ⓢ	XSN3+6S	⊕3×6 (8)
N3	XTB3+8G	Tapping, ⊕3×8 (2)
N4	XTBS3+8JFZ1	Tapping with Detent, ⊕3×8 (15)
N5 ○	SNE2095−4	Cabinet (Silver Type) (4)
N5 Ⓚ	SNE2095−5	Cabinet (Black Type) (4)
N6〔XA〕only	XYN3+F8	Screw and Washer Assemblies, ⊕3×8 (2)
N7	XTB4+8F	Tapping, ⊕4×8 (4)
N8	XTW3+8T	Tapping, ⊕3×8 (4)
N9	XYN3+F14	Screw and Washer Assemblies, ⊕3×14 (2)
WASHER		
N10 Ⓢ	XWA3B	Spring, φ3 (8)
NUT		
N11	SNE4021	(4)
ACCESSORIES		
A1〔XL〕 ⚠	SJA173	AC Cord (1)
A1〔XA〕 ⚠	SJA168	AC Cord (1)
A1〔EK〕 ⚠	SFDAC05G02	AC Cord (1)
A1 Other ⚠	SFDAC05E02	AC Cord (1)
A2〔XA〕only ⚠	SJP9215	Plug, AC Adaptor (1)
A3〔EGA〕	SQFK10088	Instruction Book (1)
A3〔XA〕	SQFK10089	Instruction Book (1)
A3 Other	SQFK10087	Instruction Book (1)
PACKING PARTS		
P1 ○	SPP699	Polyethylene Bag (Silver Type) (1)
P1 Ⓚ	SPP649	Polyethylene Bag (Black Type) (1)
P2〔XL〕only	SPS4459−1	Pad, Left Side (1)
P2 Other	SPS4459	Pad, Left Side (1)
P3〔XL〕only	SPS4460−1	Pad, Right Side (1)
P3 Other	SPS4460	Pad, Right Side (1)
P4〔XL〕 ○	SPGK169	Carton Box (Silver Type) (1)
P4〔EF〕 ○	SPGK168	Carton Box (Silver Type) (1)
P4〔EK〕 ○	SPGK167	Cartor Box (Silver Type) (1)
P4〔EK〕 Ⓚ	SPGK171	Carton Box (Black Type) (1)
P4 Other ○	SPGK166	Carton Box (Silver Type) (1)
P4 Other Ⓚ	SPGK170	Carton Box (Black Type) (1)

www.hifiengine.com

■ EXPLODED VIEW

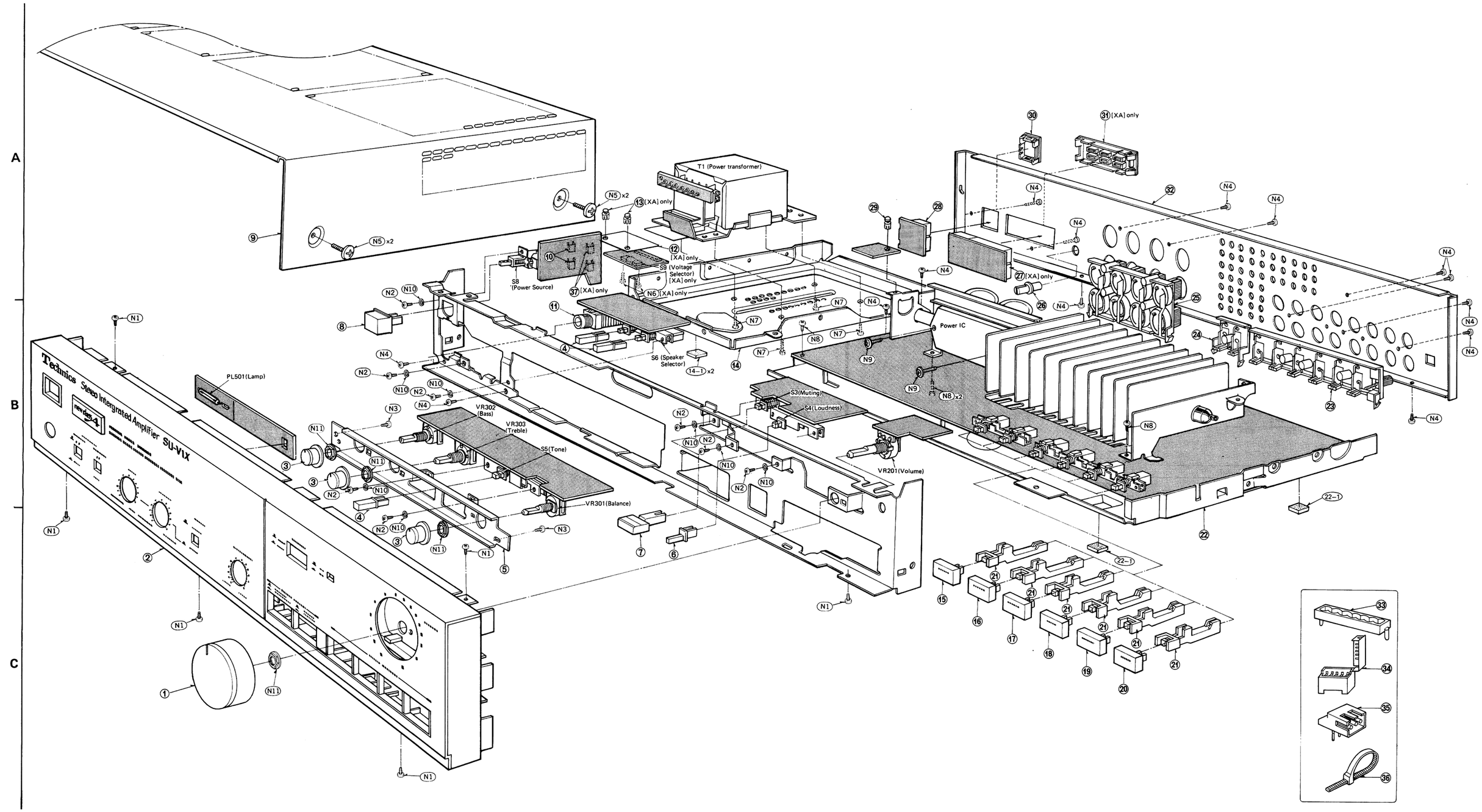

| | | |